SYM	REVISION	BY	DATE	ECN
A	ENGINEERING RELEASE	SKS	11-09-05	M65900A

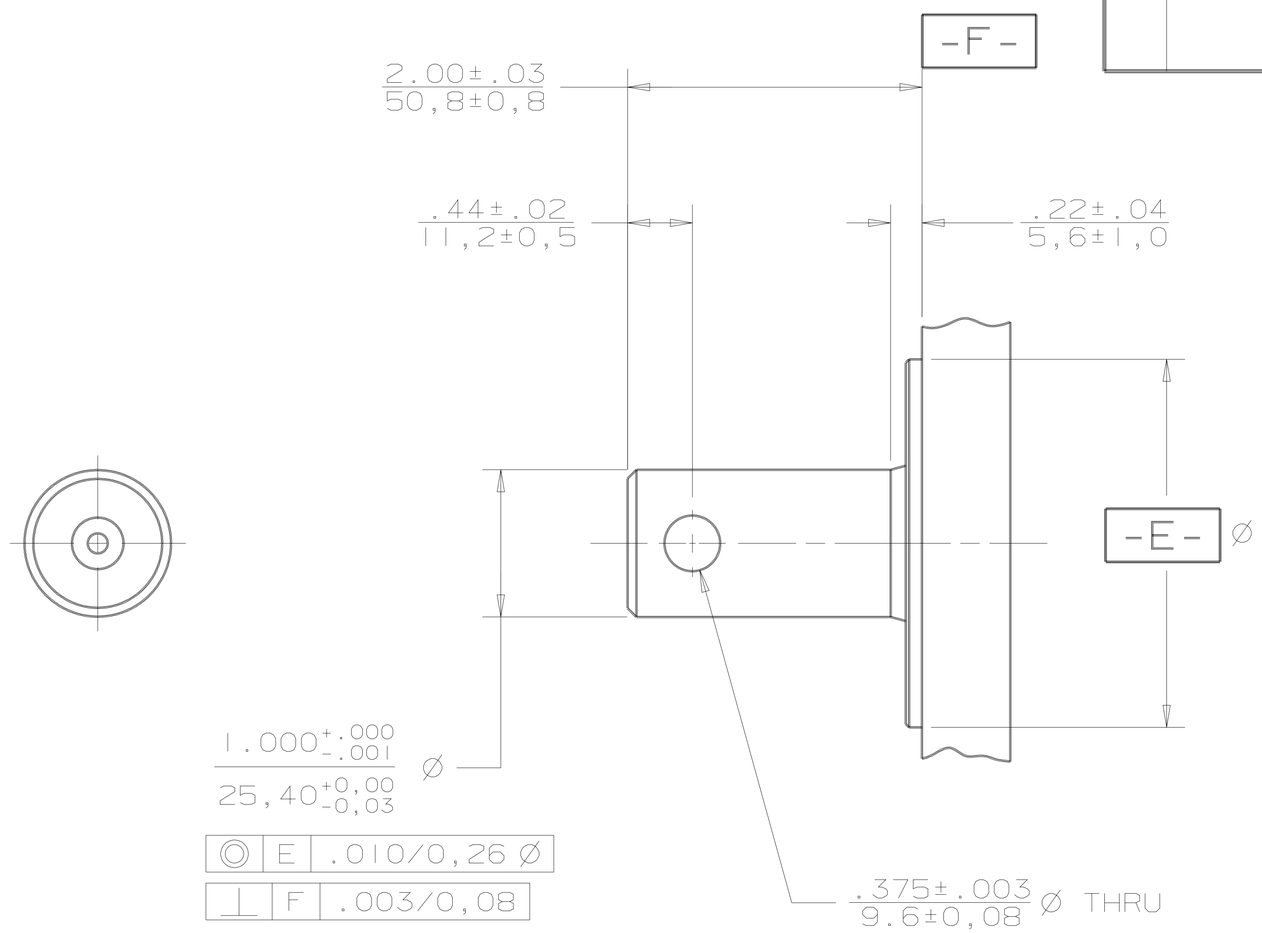

NOTE

1 OUTPUT SHAFT: OPTION 20

THE REPRODUCTION, DISTRIBUTION, AND UTILIZATION OF THIS DOCUMENT, AS WELL AS THE COMMUNICATION OF ITS CONTENTS TO OTHERS WITHOUT EXPLICIT AUTHORIZATION IS PROHIBITED. OFFENDERS WILL BE HELD LIABLE FOR THE PAYMENT OF DAMAGES. ALL RIGHTS RESERVED IN THE EVENT OF THE GRANT OF A PATENT, UTILITY MODEL, OR DESIGN. (PER ISO 16016)

Danfoss

DRAWN BY/DATE	SKS 11-14-05
CHECKED BY/DATE	SMM 11-15-05
ENGRG BY/DATE	LTH 11-15-05
DO NOT SCALE	
MATERIAL/HEAT TREAT	
TITLE	SHAFT INSTALLATION
THIRD ANGLE PROJECTION	
LINEAR MEASUREMENT IN/MM	IN / MM
NUMBER	A-109-020
SCALE	FULL SIZE
SHEET	1 OF 1